RAJIV GANDHI THERMAL POWER PLANT, KHEDAR, HISAR
[Regd. Office – C-7, Urja Bhawan, Sector – 6, Panchkula]
(A UNIT OF HARYANA POWER GENERATION CORPORATION LIMITED)
(An ISO: 9001, ISO: 14001 , ISO: 45001 Company)
Email: mm1.rgtpp@hpgcl.org.in Website: www.hpgcl.org.in
Corporate Identity Number: U45207HR1997SGC03351

HPGCL

NOTICE INVITING E-TENDER

NIT No.668/RGTPP/MM-I/TOE- 13465 **Dated: 21.10.2026**

Chief Engineer/RGTPP, HPGCL, Khedar, Hisar invites online Tenders in Two Parts from the manufacturers & their authorized dealers/suppliers for **Supply of LDO guns & other spares of Boiler to RGTPP, Khedar, Hisar.**

Sr. No.	Description	Tender Fee (Rs.) (Non – refundable)	EMD (Rs.)	E-service Fees (Rs.) (Non – refundable)	Last date of Downloading of Tender Documents , Bid Preparation & Bid Submission
1	**Supply of LDO guns & other spares of Boiler to RGTPP, Khedar, Hisar** Detailed Technical Specifications as per Annexure-1	**1180/-**	**6200/-**	**1,180/-**	**17.11.2026** up to 15:00 hrs

1) (a) Pre Qualifying Requirements (PQRs) / Eligibility Criteria for the bidders:-

The tender documents of only those bidders shall be considered who fulfill the following eligibility criteria and furnish duly signed/stamped documentary evidences along with the Part-I of tender in support of the same. The bidder shall furnish documentary evidence for the following:-

- The bidder should be manufacturer/authorized dealer/supplier of **Boiler spares**
- The bidder must have experience of having successfully executed purchase orders for supplying of **same/similar items** in HPGCL/NTPC/State Electricity Board/Public Sector undertaking/any Corporation/Central Govt./State Government /Semi Govt. or in any Thermal/Hydel Plant.
- Bidders must have successfully executed the Purchase Order(s) for the same or similar item(s) during last 7-years ending **September,2026** having minimum order value as under:-
  Single order of the value not less than Rs. 2.47 Lacs OR
  Two orders of the value not less than Rs. 1.55 Lacs each OR
  Three orders of the value not less than Rs. 1.24 Lacs each
- The bidder to certify having its own testing facilities or the same has to be carried out at any Govt. Approved test lab.
- Non-Blacklisting certificate i.e. the tenderer is not black listed from any Public Sector undertakings of Central Govt./State Govt./SEBs/Corporations/any other reputed thermal plant.

Note:-

1. In case where audited results for the last preceding financial year are not available for determining the average annual turnover, certificate of financial statements from a practicing chartered accountant shall be considered acceptable.
2. The firm should fill statement to bidders as per Annexure-2 of General Terms & Conditions and submit authentic supporting documents for proving its credential. Original documents may be asked for verification at the time of finalizing the tender.

(b) Non-blacklisting Certificate:-

Tenderer shall submit a certificate to the effect that "the tenderer is not black listed from any Public Sector undertakings of Central Govt./State Govt./SEBs/Corporations/any other reputed thermal plant."

Criterion for Evaluation of Blacklisting: The firms who have been blacklisted by HPGCL or any other Centre or State Power Utility/Board or Corporation/or any other Thermal/Hydro Elect. Project shall not be eligible to bid against the NIT of HPGCL, however:

(i) In case the blacklisting of the firm is for a specific plant and not for the organization as a whole then such blacklisting will not tantamount to ineligibility of the bidder.

(ii) Blacklisting of the firm by any Unit of HPGCL shall be considered as ineligibility of the firm at any other project of HPGCL.

(iii) In case any firm was blacklisted for a limited period in past by any organization and presently such blacklisting has removed by such organization then it will not tantamount to ineligibility of the bidder.

(iv) Firm has to certify itself for its eligibility with supporting documents to participate in the NIT stating that it has not been blacklisted by any organization presently, however in case at a later stage if such certification is found wrong then it will lead to misrepresentation of facts

and the firm shall be treated as blacklisted on this ground and action shall be taken as per regulation 36 and 37.

Decision of the HPGCL regarding fulfillment of pre qualification requirement shall be final and binding upon the bidders.

The Bidders can download the tender documents from the Portal: https://etenders.hry.nic.in.

(I) Pre-requisites for online bidding:

In order to bid online on the portal https://etenders.hry.nic.in , the user machine must be updated with the latest Java. The link for downloading latest java applet is available on the Home page of the e-tendering Portal.

(II) Online Viewing of detailed Notice Inviting Tenders:-

The bidder can view the detailed NIT and the time schedule (Key Dates) for all the tenders floated through the single portal e-procurement system on the home Page at https://etenders.hry.nic.in.

(III) Bid Preparation (Technical & Financial) Online Payment of Tender Document Fee, e-Service fee, EMD fees and Submission of Bid Seal of online Bids:-

i) The Bidders shall have to pay for the **Tender Documents Fees (Rs. 1180/-), EMD Fees (Rs. 6200/-) & E-Service Fee (Rs. 1180/-) online** by using the service of secure electronic payment gateway. The secure electronic payments gateway is an online interface between contractors and online payment authorization networks. The Payment for Tender Document Fee and eService Fee can be made by eligible bidders online directly through Debit Cards & Internet Banking Accounts and the payment for EMD can be made online directly through RTGS / NEFT. For online payments guidelines, Home Page of l e-tendering portal https://etenders.hry.nic.in may be referred.

ii) Tender Fees and EMD Exemption Criteria:-

The following are exempted from depositing the earnest money (EMD):-

a) **Public sector undertakings of the central/Haryana State Government .**
b) **Firms borne on D.G.S. &D/DS&D Haryana rate contracts.**
c) **Firms registered with the director of industries, Haryana or registered with National Small industries Corporation, Govt. Of India (NSIC). The exemption shall be for the specified items which are available on Director of Industries/NSIC Rate contracts.**
d) **Firms borne on the HPGCL's approved list of suppliers who have deposited permanent security of Rs. 10,00,000/- in cash/Bank Draft only with CE/RGTPP, Khedar, Hisar are exempted from deposit of earnest money. However they are required to super-scribed the Registration number given by respective project/office of HPGCL in their tender papers.**
e) **Only Haryana based Micro, Small industrial Enterprises (manufacturing) as extended by Haryana Govt. in O/o No.: 2/2/2016-4IBII (1) Dated: 20.10.2016 as per Annexure- 4 attached.**
f) Tender fees is exempted only for **Haryana based Micro, Small Industrial Enterprises (manufacturing) only** as extended by Haryana Govt. in O/o No.: 2/2/2016-4IBII (1) Dated: 20.10.2016 as per Annexure attached.
g) No relaxation will be allowed to firms for exemption in Tender Fees and EMD fees other than firms detailed above. All firms are requested to deposit E-service Fees, Tender Fees and EMD fees online failing which tender shall liable to be rejected.

h) In cases where tenders are received in two parts, the bidder shall upload their technical offer containing documents, qualifying criteria, technical specifications, schedule of deliveries and all other terms and conditions except the rates (Price-Bid) in the part-I (Technical envelope). The price bid shall be submitted in separate part-II format supplied by purchasing authority online. The committee members shall open only part-I on scheduled date of opening of Technical bid. As per system settings, Part-II can't be opened on that date.

i) The tenders shall be opened on the due date by tender opening committee comprising Executive Engineer and Sr. A.O. The tender documents shall be downloaded and print outs taken.

j) The EMD of the successful tenderers will be adjusted against security deposit in the event of placement of order. EMD of unsuccessful tenderers will be refunded on finalization of contract.

k) No interest shall be payable on Earnest Money Deposit.

l) HPGCL reserves the right to forfeit Earnest Money Deposit or part thereof in circumstances which may indicate that the tenderer is not earnest in executing the contract. EMD shall also be forfeited in case the bidder does not come forward for execution of the contract agreements and submission of balance security deposit.

m) If the tenderer withdraws his tender at any stage during the currency of his validity period, the EMD shall be forfeited in full in such cases.

(IV) **Key Dates:-**The Tenderer can submit their tender documents (Online) as per the dates mentioned in the following Format:-

Sr. No.	Department Stage	Tenderer's Stage	Start date and time	Expiry date and time
1	-	Downloading of Tender Documents & Bid Preparation	**21.10.2026** From 17:00 hrs	**17.11.2026** up to 15:00 hrs
2	Technical Opening (Part-I)		**20.11.2026** at 15:30 hrs.	
3	Short listing/Qualifying of Technical bids & Opening of Financial Bid		Will be intimated to the firms on their e-mail	

The bidders are strictly advised to follow dates and times as indicated in the online Notice Inviting Tenders. The date and time shall be binding on all bidders. All online activities are time tracked and the system enforces time locks that ensure that no activity or transaction can take place outside the start and end dates and the time of the stage as defined in the online Notice Inviting Tenders.

If bidder fails to complete the Online Bid Submission stage on the stipulated date and time, his/hers bid will be considered as bid not submitted, and hence not appear during tender opening stage.

(V) If the Tenders are cancelled or recalled on any grounds, the Tender Documents fees and e-service fees will not be refunded to the firm. However, EMD shall be refunded.

(VI) Unless exempted specially, tenders not accompanied with the prescribed EMD/ Cost of Tender shall be rejected. EMD/ Cost of Tender shall be in the prescribed mode of payment as asked in the NIT, otherwise, the tender shall be liable to be rejected.

(VII) The bidders shall ensure that payment shall be made at least 2 days prior to last date of submission of the bid.

(VIII) The bidder can revise his price-bid any number of times but only before last date of submission of bid. All previous quotes are deleted and only the latest price quoted is visible to the purchasing authority on the date of opening of price-bid.

(IX) Material offered should be strictly according to the specifications. Unless a deviation from the specifications is pointed out by the tenderer specifically, it will be presumed that offer/tender conforms to the specifications.

(X) The validity of the tender/offer shall be for 120 days from the date of opening of the price bid.

(XI) Negotiation shall be carried out as per Haryana State Government policy in vogue duly adopted by HPGCL.

(XII) The rates shall be quoted by the tenderer, item wise with price break-up on FOR destination basis in the format supplied by the purchaser. No deviation in terms shall be allowed.

(XIII) The bidders / suppliers shall observe the highest standard of ethics during the submission of tender, procurement and execution of the contract. In case of evidence of cartel formation by the bidder(s), EMD is liable to be forfeited.

(XIV) The bidder shall bear all costs including the bank charges, if any, associated with the preparation and submission of his bid, and the purchaser will in no case be responsible or liable for those costs, regardless of the conduct or outcome of the bidding process.

(XV) Purchaser reserves the right to cancel the NIT or to change qualifying requirement or to reject any or all the tenders so received without assigning any reason.

(XVI) Preliminary information for bidders:

a) Registration of bidders on e Procurement Portal:-

All the bidders intending to participate in the tenders processed online are required to get registered on the centralized e-Procurement Portal i.e. https://etenders.hry.nic.in. Please visit the website for more details.

b) Obtaining a Digital Certificate:

i) The Bids submitted online should be encrypted and signed electronically with a Digital Certificate to establish the identity of the bidder bidding online. These Digital Certificates are issued by an Approved Certifying Authority, by the Controller of Certifying Authorities, Government of India.

ii) A Digital Certificate is issued upon receipt of mandatory identity (i.e. Applicant's PAN Card) and Address proofs and verification form duly attested by the Bank Manager / Post Master / Gazetted Officer. Only upon the receipt of the required documents, a digital certificate can be issued. For more details please visit the website – https://etenders.hry.nic.in.

iii) The bidders may obtain Class-II or III digital signature certificate from any Certifying Authority or Sub-certifying Authority authorized by the Controller of Certifying Authorities. The bidder may obtain information f**or support related to Haryana Tenders in addition to helpdesk you may also contact on email ID - eproc.nichry@yahoo.com , Tel- 0172-2700275**

Help Desk: 0120-4200462, 0120-4001002, Mobile-8826246593

iv) Bid for a particular tender must be submitted online using the digital certificate (Encryption & Signing), which is used to encrypt the data and sign the hash during the stage of bid preparation & hash submission. In case, during the process of a particular tender, the user loses his digital certificate (due to virus attack, hardware problem, operating system or any other problem) he will not be able to submit the bid online. Hence, the users are advised **to keep a backup of the certificate** and also keep the copies at safe place under proper security (for its use in case of emergencies).

v) In case of online tendering, if the digital certificate issued to the authorized user of a firm is used for signing and submitting a bid, it will be considered equivalent to a no-objection certificate/power of attorney /lawful authorization to that User. The firm has to authorize a specific individual through an authorization certificate signed by all partners to use the digital certificate as per Indian Information Technology Act 2000. Unless the certificates are revoked, it will be assumed to represent adequate authority of the user to bid on behalf of the firm in the department tenders as per Information Technology Act 2000. The digital signature of this authorized user will be binding on the firm.

vi) In case of any change in the authorization, it shall be the responsibility of management / partners of the firm to inform the certifying authority about the change and to obtain the digital signatures of the new person / user on behalf of the firm / company. The procedure for application of a digital certificate however will remain the same for the new user.

vii) The same procedure holds true for the authorized users in a private/Public limited company. In this case, the authorization certificate will have to be signed by the directors of the company.

viii) Bidders participating in online tenders shall check the validity of his/her Digital Signature Certificate before participating in the online Tenders at the portal https://etenders.hry.nic.in.

ix) For help manual please refer to the 'Home Page' of the e-Procurement website at https://etenders.hry.nic.in, and click on the available link 'System Requirement" to download the file.

x) Before submitting tenders all the instructions may be read carefully regarding submission of tenders. If ant bidder finds discrepancies or omission in the tender documents or is in doubt as to the true meaning of any part, he shall clarify the same from tender issuing office in writing before the due date of submission of the bid.

(XVII) Conditions of the contract and other information can be had from the office of XEN/MM-I (E-mail: mm1.rgtpp@hpgcl.org.in , Tel. No. 01693-250565, 9315164637) on any working day prior to last date of downloading of tender documents & bid preparation. Before submitting tenders the instructions may be read carefully regarding submission of tender. If any bidder finds discrepancies or omissions in the tender documents or is in doubt as to the true meaning of any part, he shall clarify same from tender issuing office in writing before due date and time of submission of bid.

(XVIII) The tenderer shall quote the prices in English language and international numerals. The rates shall be in whole rupees and shall be entered in figures. For the purpose of tender, the metric system of units shall be used. The tenderers will quote their rates strictly as per details of material specifications.

(XIX) If the tenderer deliberately gives wrong information in his tender, HPGCL reserves the right to reject such tender at any stage.

(XX) All tenders received against open tender enquiry irrespective of whether they are from the approved suppliers on the registered list or others, shall be considered, provided they are on the prescribed e-tendering process mentioned above.

(XXI) No provision for price escalation is made on any account. The price quoted by the tenderer shall be **FIRM** till the contract is completed. The tenderer acceptance of this condition should be indicated along with the Bid. Rates shall be quoted by the tenderer item wise with price breakup on FOR destination basis. Ordinarily the deviation in terms shall not be considered.

(XXII) Normally the tenders should not differ from the Terms & Conditions and technical specifications incorporated in the Tender Documents. In case of any deviation the same shall be specifically mentioned on separate sheet otherwise it will be presumed that tenderer agreed all terms & conditions as per Tender Document.

(XXIII) Opening of Tender:-

The tenders will be opened in the office of XEN/MM-I, RGTPP, HPGCL, Khedar, Hisar in the presence of authorized representative of the tenderer, if they so desire, at the time and date set for opening of tenders or in case any extension was given thereto on the extended tender opening date and time. Tenderer authorized representatives (up to two persons) may attend the opening.

The Price Bid (Part-II of the tender) shall be opened after Part-I of the tenders have been scrutinized and evaluated. The tenderer whose Part I have been approved, will be allowed to participate in opening of Price Bid (Part-II). The due date and time for opening of Price Bid (Part-II) shall be informed later on through mail.

Executive Engineer/MM-I
for SE/ MM & Stores,
RGTPP, Khedar, Hisar

(Referred to in regulation 7)

GENERAL TERMS AND CONDITIONS OF CONTRACT (Supply order)

1) Definitions:-

In the contract (as defined below) unless the context requires otherwise the words and expressions defined below shall have the meaning hereinafter assigned to them.

a) The 'Purchaser' shall mean the HPGCL and shall include its successors in office and assigns.

b) The 'Supplier /Manufacturer' shall mean M/s._____ and shall include the Supplier's legal representatives, successors, and assigns.

c) 'Material' shall mean and include the material to be supplied by the Supplier under the contract as per contract.

d) 'Specifications' shall mean & include the specifications as detailed in Annexure attached herewith and drawings attached thereto as well as samples and patterns, (if any).

e) 'Drawing' shall mean the drawing /drawings annexed to the specification (if any) or as approved by the purchaser.

f) The 'Site' shall mean and include lands & buildings over / under upon where the materials are to be installed and used in accordance with terms & conditions.

g) 'Place of delivery' shall mean the place of delivery at which the Supplier is responsible to deliver the materials at the specified contract price.

h) The terms ''F.A.S', 'F.O.R', 'F.O.B.', 'C.I.F.' and other shipping dispatch terms as used herein shall have meaning in accordance with their usage in India.

i) 'Work' shall mean and include supply of all materials, plants and equipments and rendering of other services by the supplier under this contract

j) 'Consignee' shall mean the officer to whom the material is required to be despatched or the person specified in the purchase order.

k) 'Contract' shall mean the Notice Inviting the Tender, Tender Form, and conditions of contract with their annexure and Purchase Order / Acceptance of offer / tender/LOI/LOA.
-'Purchasing Authority' shall mean the officer signing the acceptance of tender and shall include any officer who has authority to execute the relevant contract on behalf of the Purchaser.

l) 'Purchase Order' shall mean an order of supply of material including the acceptance of the tender.

m) 'Annexure' shall mean the Annexure to the terms & conditions.

n) 'Test' shall mean such test as is prescribed by the ISI or by the HPGCL and / or considered necessary by the authorized agent of the Purchaser whether conducted / performed or made by him or any other agency acting under his direction.

o) 'Delivery' shall be deemed to take place on delivery of material in accordance with terms of the Contract after test and inspection by the Purchaser or his authorized agent, to the consignee. If the rates are ex-works, date of dispatch/Goods Receipt (GR) and in case the rates are FOR destination, date of receipt of material in store in good conditions shall be treated as date of delivery.

p) 'Inspecting Agency' means the agencies nominated and authorized by the competent authority for inspecting the material at the works of the supplier or at the designated place of inspection prescribed by the purchasing authority.

q) 'Inspecting Officer' means, officer of the Corporation appointed by the Chief Engineer or the purchasing authority for inspection.

r) 'Contract Value' shall mean the bare value of the goods 'ex-works price' without taking into account taxes, duties or any other incidental charges where the price is ex-works, but where the prices given in the PO are on FOR destination basis inclusive or exclusive of GST etc., the 'Contract value' would mean FOR destination prices, given in the PO inclusive of GST, other statutory levies etc. as the case may be.

s) 'Total Contract Value' shall mean contract value plus statutory dues like GST etc. and any other amount payable under contract.

2) PARTIES:

The parties to the Contract are the Supplier and the Purchaser, Legal address of the Parties to the Contract is as under:

Supplier: M/s. on which P.O. is placed.

Purchaser: RGTPP, Haryana Power Generation Corporation Ltd.

For all purposes of the contract, including the arbitration there under, the address of the Supplier mentioned above, shall be the address to which all communications addressed to the supplier shall be sent, unless the supplier has specifically intimated a change thereof.

3) AUTHORITY OF THE PERSON SIGNING THE CONTRACT ON BEHALF OF THE SUPPLIER:-

It is presumed that the person who has signed these Tender-papers (including the terms and conditions) has got authority to sign on behalf of the supplier. If it is discovered at any time that the person so signing had no authority to do so, the purchaser without prejudice to any other right or remedy available to him, may cancel the contract and make a purchase of the material at the risk and cost of such person and hold such person liable to the purchaser for all costs and damages arising from the cancellation of the contract including any loss which the purchaser may sustain on account of such purchase.

4) PRICES:

(i) Item wise prices with price breakup (i.e. cost price, freight, taxes and duties separately) shall be quoted by the bidders on FOR destination basis and shall remain FIRM during the currency of contract unless otherwise agreed. No deviation in terms should be allowed. However if not provided separately, then loading of Packing & Forwarding, Freight and Insurance shall be done, for comparison purpose, as under:

(a) Packing & Forwarding : @ 0.5% of the basic rate.

(b) Freight : @ 4 % of the basic rate **or** the railway freight on the basis of published goods tariff of Indian Railways **or** Freight on the basis of publication/certification of some approved transporter in case of any other mode of transport declared in the NIT, whichever is higher.

(c) Transit Insurance : @ 0.25% of basic rate.

(ii) GST, if charged, separately shall be paid as per actual within delivery period on production of following certificates:

a) Certified that transaction on which tax has been claimed will be included in the return to be submitted to the GST authorities for the assessment of GST and the amount claimed from HPGCL shall be paid to the GST authorities.

b) Certified that the goods on which GST has been charged have not been exempted from GST under Haryana / Central GST Act or rules made there under. The charge on account of the GST on these goods is correct under the provisions of the relevant act or rules made there under.

c) Certified that we shall indemnify to HPGCL in case it is found at a later stage that incorrect payment has been recovered on account of GST by us.

d) Certified that we are registered as dealer and our Haryana / Central GST No. is _____

*Our GST No. is …….. Dt. …….

Note:- Any increase in taxes and duties after the delivery period shall be on supplier's account and shall not be borne by HPGCL (The above note shall not be applicable in case supplier is a Gov./Semi Govt./PSU).

(iii) ESCALATION/PRICE VARIATION CLAUSE.

No escalation shall be permitted in respect of any increase not arising out of the operation of any law and statutory or mandatory order of the Govt. of India or the concerned State Govt. In case the period of the purchase order for completion of supplies is more than one year and tenderer wishes to include an escalation clause in his quotation then bidder should provide full details of the escalation formula and bring out precisely the actual increase in the price of the finished item for every rupee worth of increase in each item of raw material/component of wages, to which the escalation applies. The tenderer shall furnish such documentary evidence, as may be required by the HPGCL, in support of the increase in respect of each item of raw material/component of wages etc. for which the escalation is claimed. No escalation/price variation shall be considered beyond the scheduled delivery period. However, for valuation of L1 bidder the total contract value for the contract period shall be considered.

(iv) Foreign Exchange variation:

In case of the contract for procurement is in foreign currency then the applicability of the foreign exchange variation should be clearly defined. The period of the applicability of the exchange variation should be restricted according to the delivery schedule. Ordinarily the exchange variation should not be permitted in the extended period of the delivery.

5) EARNEST MONEY AND SECURITY DEPOSIT:-

Every tenderer, while submitting his tender, shall deposit the earnest money specified in the NIT (**Rs. 6200/-)**.

The earnest money furnished by the successful tenderers on whom the purchase order is placed shall be converted into security deposit as a guarantee for faithful and satisfactory execution of the purchase order up to warranty period. **The security deposit in case of Purchase Order shall be 2% of the contract value**.

The EMD of the unqualified bidders will be returned by the purchaser without any interest, as promptly as possible, within 30 days after declaration of qualification result and that of unsuccessful bidders within 15 days of the execution of the contract with the selected bidder.

Provided further that the provision of this regulation may not apply to a Public Sector undertaking of the Central/ State Government, firms borne on D.G.S & D / DS&D Haryana rate contract, firm registered with Director of Industries, Haryana or with National small industries corporation, Govt. of India or the firms having permanent EMD of Rs. 10.00 Lac at the respective project / office.

The earnest money /security deposit shall be forfeited in part or in full under the following circumstances:-

I. If the tenderer withdraws his tender at any stage during the currency of his validity period.
II. If the P.O. has been issued but the supplier refuses to comply with it.
III. Where the purchase order has been complied with but the supplier stops making the supplies after partially fulfilling the purchase order.
IV. In the event of breach of a contract in any manner.
V. In the case of evidence of cartel formation by the bidder(s).

In case where the Performance Bank Guarantee has been agreed by the supplier, the security deposit shall be released on the completion of the supplies. In other cases the same shall be released only after warrantee period on the certificate of the purchaser for satisfactory completion of the warrantee period.
No interest shall be paid on EMD for the period it remains deposited with HPGCL.

6) PAYMENT TERMS:-

Subject to any deductions which the purchaser may be authorized to make under this contract, the payment for the material shall be made as under:-

100% payment shall be made after 21 days of receipt of material at site in good condition and after receipt/ adjusting of 10% Performance Bank Guarantee (if applicable) and on submission of requisite documents as per Purchase Order.

OR

90% payment against documents through bank after 21 days of receipt of intimation from the bank and after receipt/ adjusting of 10% Performance Bank Guarantee (if applicable) and on submission of requisite documents as per Purchase Order and balance 10% after receipt of material in good condition.

Note:-

- Receipt of material at site shall mean receipt of material in accordance with terms of the Contract after test and inspection by the Purchaser or his authorized agent, along with the requisite documents specified in clause no. 10.
- In case any payment term has been agreed in deviation to the above, loading in the prices shall be made @ 0.50% per week or part thereof at the time of preparation of comparative statement.
- In case any damage, shortage, etc, are noticed on receipt of material by the consignee, claims shall be lodged with the suppliers and the amounts due to him withheld or the bank guarantee shall not be released till the claims are satisfactorily settled by the supplier.
- In case of defects/damages in the material being noticed at any time, including during the warranty period, claims shall be lodged with the firms to make good the defects/damages or replace the material within a reasonable period not exceeding 30 days from the date of notification of the defects to the suppliers. In case of the supplier/firm failing to do so, the damages/defects may be got rectified by the corporation and the claim may be adjusted from the supplier's/firm's pending dues and/ or security deposit against this or any other contract in force and the balance be got made good by the supplier. Alternatively, the corporation may dispose-off the damaged/defective material and set off the sale proceeds against its claim against the supplier.

7) MODE OF PAYMENT:-

Payment shall be released by the Sr. Accounts Officer, RGTPP by account payee cheque payable at _____/RTGS/NEFT. For payment through RTGS/NEFT, the supplier will provide complete bank details viz. Name of Bank/Branch, Account Number, Type of Account, IFSC Code etc. to Sr. Accounts Officer, RGTPP.

8) DELIVERY PERIOD AND DAMAGES FOR DELAY:-

The date of delivery of material as specified in the purchase order shall be the essence of the contract between the supplier and the Corporation, and the delivery of each consignment must be made as per given delivery schedule in Annexure-I of NIT.
No supplies/ consignments received after the date on which they were actually due according to the terms of the purchase order, shall be accepted by the consignee, except with the written approval of the purchasing authority.
Even in case of acceptance of delayed supply the supplier shall be liable to pay @ 0.5% per week or part there-off of the delay of the value of the goods so delayed where the part

supply is acceptable and of the PO value where part supply is not acceptable, subject to a maximum of 5% of the contract value.
The delivery period as per Annexure-I
Property in the material shall not pass to the purchaser unless and until the material has been delivered to the consignee in accordance with the terms and conditions of P.O.

9) TESTS AND INSPECTIONS:-

The tests and inspections shall normally be arranged at the supplier's premises before the material is dispatched to the Corporation, and copy of the inspection/ test report in such case shall be attached by the supplier in original along with Railway Receipt/ GR and other requisite document as per P.O. For this purpose, the supplier shall give **at least 15 days** notice to the purchasing authority to arrange for the inspection of goods offered for dispatch, on different occasions, before dispatch if inspection is not waived off. In addition to this, the supplier has to submit copy of test certificates along with inspection call. Without test certificates, pre-dispatch inspection call will not be accepted and delay on this account will be on the part of the supplier

HPGCL has the right to get the pre-dispatch inspection done from third party along with HPGCL representative.

In case, the supplier is not having its own testing facility and any agency has not been specifically mentioned in the PO, then the supplier will submit the test certificates issued from any Govt. approved laboratory.

Supplier shall ensure that all the facilities necessary for carrying out the inspection/prescribed tests are made available to the inspection officer at the point of inspection to be carried out.

In case of non conduct of testing due to non availability of material, the charges of the inspecting officers shall be borne by the supplier.

The inspection call received after expiry of delivery period may or may not be entertained.

Supplier shall dispatch the material with copy of inspection report and test certificate, immediately after inspection but not later than 10 (Ten) days failing which the delay shall be on the part of supplier for the purpose of L.D. In case of waiver of inspection, supplier shall dispatch the material within 10 days of receipt of waiver letter or 15 days of dispatch of waiver letter whichever is earlier. In case prices are F.O.R destination basis, even then the time period as above will be allowed for dispatch of material.

10) DOCUMENTATION:-

The supplier shall submit a set of documents as detailed below well in time to the following offices for processing his bill for pass and payment. {as applicable}

A) <u>Concerned Executive Engineer (Purchaser copy)-</u>
- a) Acceptance of PO
- b) Readiness of material/ inspection call
- c) Copy of invoice
- d) Copy of RR/GR
- e) Advance intimation of dispatch
- f) Test Certificates
- g) E-Way Bill

B) <u>Concerned Sr. A.O. (Accounts copy)</u>
- a) Copy of invoice in triplicate
- b) GST Certificate
- c) Proof of Insurance charges
- d) Guaranty/ Warranty Certificate
- e) Inter-changeability Certificate
- f) Copy of inspection report
- g) D.D on account of security deposit
- h) Performance Bank Guaranty.
- k) Copy of R.R./G.R.
- f) E-way Bill

C) <u>Concerned Executive Engineer/ Stores (Consignee copy)</u>
- a) Copy of Invoice.
- b) Copy of Inspection Report
- c) Dispatch particulars
- d) Copy of RR/GR.
- e) E-Way Bill

D) <u>Appropriate branch of State Bank of India, if document are to be negotiated through Bank</u>
- a) Copy of invoice
- b) Original RR/ GR.

Note:-
If the documents shown above are not sent to the appropriate office within due period then bank document will not be retired and the responsibility for demurrage/ wharfage or auction of material will be on the supplier's account.

No interest, what so ever on any account shall be paid by HPGCL.

Bank Charges if any shall be borne by the supplier.

11) PACKING:-

The supplier shall provide for secure protection & packing of the equipment in accordance with the best established Practices so as to protect the equipment from damages. Any breakage, damage and/or pilferage including when in transit arising from faulty packing shall be the responsibility of the supplier. All packages shall be visibly marked mentioning purchase order number & name of buyer in bold letters & must contain copies of challans/packing slips inside.

12) MODE OF TRANSPORT:-

The normal mode of transport for dispatch of material from supplier's end shall be by train / approved road transporter of HPGCL.

13) TRANSIT INSURANCE:

(A) The material shall be insured against all risks and loss for its full delivered value up to the destination station. The insurance charges from dispatching station up to the destination station will be borne as per provision in the PO. The Supplier shall produce insurance cover and also a stamped acknowledgement receipt of the insurance company for the premium paid by them in support of their claim, if any. The consignee shall report losses/damage to the Supplier at the earliest possible of the receipt of the consignment at the site.

It will, however, be the responsibility of the Supplier to prefer timely claim on the insurance underwriters. The Supplier will make good the losses / shortages, replace / repair the damage to the consignee irrespective of the claim lodged / to be lodged with the insurance underwriters or other appropriate authorities.

The Supplier shall supply or replace such material or parts as are lost in transit within reasonable time based on the delivery period free of charges.

The Supplier shall be responsible for all loss, destruction, damage, deterioration of the material from any causes whatsoever in the course of transit from the Supplier to the consignee. If insurance is in the scope of consignee, the firm will intimated to consignee advance about dispatch of material otherwise all the losses, if any will be in the account of supplier.

(B) In case of supply of material against documents through bank, no material shall be accepted without proper transit insurance.

14) PERFORMANCE BANK GUARANTEE:- supplier shall submit bank guarantee of the nationalized bank equivalent to 10% of the order value in the prescribed Performa valid up to 21 months from the date of dispatch of material or 3 months after completion of g/w period

15) GUARANTEE/WARRANTY:- The supplier shall be made responsible to replace free of cost, with no transportation or insurance cost to the Corporation, up to the destination the whole or any part of the material, which in normal and proper use proves defective in quality or workmanship, subject to the condition that the defect is noticed within 12 months from the date the material is used or 18 months from the date of dispatch, whichever period may expire earlier. The consignee or any other officer of the corporation actually using the material will give prompt notice of each such defect to the supplier as well as the Purchasing Authority and the Sr. A.O.. The replacement shall be effected by the supplier within reasonable time, but not, in any case, exceeding 45 days. The supplier shall, also, arrange to remove the defective supply within a reasonable period, but not exceeding 45 days from the date of issue of the notice in respect thereof, failing which, the corporation shall reserve the right to dispose-off the defective material in any manner considered fit by it at the sole risk and cost of the supplier. Any sale proceeds of the defective material after meeting the expenses incurred on its custody, disposal, handling etc. shall, however, be credited to the supplier's account and set off against any outstanding dues of the corporation against the supplier.

The supplier shall furnish warrantee certificate stating that, "we will be responsible to replace within 45 days of the date of issue of notice, free of cost, with no transportation or insurance-cost to the Corporation, up to the destination the whole or any part of the material supplied by us against P.O. No.- _____ dated _____, within a period of _____which in normal and proper use proves defective in quality or workmanship, within 12 months from the date the material is used or 18 months from the date of dispatch whichever period may expire earlier".

The provisions shall, mutatis mutandis apply to the replaced material. In case the material is again found to be defective within a period of 12 months of its replacement, it shall also have to be replaced similarly by the supplier (Guarantee/warrantee clause shall be applicable to the replaced material also).

16) FORCE MAJEURE:-

The delay in delivery of the supply may be treated as force majeure to the supplier only if:-

i) The delay in manufacture or delivery of the material /equipment on order result from any causes arising out of compliance with regulations, orders or instructions of the Central or State Governments, acts of God, acts of Civil & Military authority, fires, floods, strikes, lock-outs, freight embargoes, war-risk riots and civil commotion and

ii) The supplier's request for extension of the delivery period along with all necessary evidence, before the expiry of the schedule date (s) of delivery.

Non -availability of raw material or any other similar cause shall not be considered as a force majeure circumstance.

17) DEMURRAGES:-

The Supplier shall be responsible for all demurrage charges due to late receipt of G.R. and non-receipt of prior intimation of dispatch of material to the consignee. G.R. through bank other than specified one will not be accepted. If any consignment and or its relevant shipping document are dispatched to an incorrect address / destination or parts of the case, the additional expenses involved & delay in delivery shall be to the Supplier's account.

18) ARBITRATION: -

All matters, questions, disputes, differences and/or claims arising out of and / or concerning, and / or in connection with, and/or in consequences or relating to this contract, whether or not obligations of either or both parties under this contract be subsisting at the time of such dispute and whether or not this contract has been terminated or purported to be terminated or completed, shall be referred to the sole arbitrator to be appointed by the mutual consent from panel of Arbitrators provided by HPGCL. The firm may give consent on anyone from the panel. In case no consensus is arrived at between the parties then aggrieved party can approach the competent court of law for appointment of Sole Arbitrator. The award of the Arbitrator shall be final and binding on the parties to this contract. Subject to aforementioned provisions, the provisions of Arbitration & Conciliation Act, 1996 as amended from time to time and rules made thereunder for the time being in force, shall apply to the Arbitration proceedings under this clause.

It has been agreed between both the parties that the fee of the Arbitrator shall be governed by Arbitration and Conciliation Act, 1998 as amended subject to condition that the fees shall not exceed Rs. 10,00,000/-

19) LAWS GOVERNING CONTRACTS:-

All contracts shall be governed by the laws of India for the time being in force.

Irrespective of the place of delivery, place of performance or place of payment under a contract, the contract shall be deemed to have been made at the place from which the acceptance of tender has been issued.

Jurisdiction of Courts- The courts of the place from where the acceptance of tender has been issued shall alone have exclusive jurisdiction to decide any dispute arising out of or in respect of the contract.

20) RISK PURCHASE:-

In the case of delay or non-supply of any or all the material on the dates they are due, the HPGCL will have a right to refuse to accept such delayed supplies and to make the purchase of the material so delayed or not supplied from any alternative source or through departmental manufacture, at the sole risk and cost of the supplier. Any extra expenditure incurred on such purchase or departmental manufacture shall be recoverable in full from the supplier in addition to the Corporation's right or claim for applicable liquidated damages or penalty.

21) SET OFF:-

Any sum of money due and payable to the supplier under the contract (including security-deposit returnable to the supplier) may be appropriated by the HPGCL and set-off against any claim of the Corporation for the payment of a sum of money arising out of under that or any other contract entered into by the supplier with the HPGCL.

22) INTERCHANGEABILITY:-

Supplier shall furnish inter-changeability certificate, wherever applicable, that all the spares are identical in construction, interchangeable and suitable to the equipment installed at site.

23) PATENT RIGHT:-

The supplier shall indemnify the Purchaser against all third-party claims of infringement of patent, trademark or industrial design rights arising from use of the Goods or any part thereof in India.

24) SUBLETTING AND ASSIGNMENT:-

The Supplier shall not, sublet, transfer or assign the contract or any part thereof or interest therein or advantage thereof in any part thereof in any manner whatsoever without prior consent of the purchaser.

25) PLACEMENT OF ORDER:- It is not binding on this office to place the P.O for all the items mentioned in the NIT. The quantity of various items mentioned in the tender enquiry notice can be increased or decreased by this office as per requirement.

Note:-

1. Unless agreed otherwise the above terms and conditions of the contract will form the part of the purchase order after finalizing the procurement proposal. The word tenderer where ever used above shall be read as supplier. The non applicability / modification in the aforesaid clauses if agreed shall be mentioned / attached in / with the purchase order specifically.

2. Any other term not defined in instructions to the bidder or above terms and conditions should be interpreted as defined in " HPGCL Works & Purchase Regulation 2015".

3. The term "Bid" and "tender" and their derivatives ("Bidder / Tenderer" "Bidding / Tendering") are synonymous. Singular also means plural.

26) Part Supply Part Payment:- Applicable.

XEN/MM-I
For Chief Engineer/RGTPP,
HPGCL, Khedar, Hisar.

ANNEXURE-'1'

(The bidder must upload this Annexure-1 dully signed & stamped along with NIT documents)

Technical Bid

Sr. No.	Item Description & Specifications	Qty.	Name of Consignee	Destination of Consignment	Delivery Period
FOR RGTPP, Khedar, Hisar, Haryana			XEN/Store, RGTPP, HPGCL, Khedar, Hisar.	Permanent Store, RGTPP, HPGCL, Khedar, Hisar	**Within 90 days from 7th day of issue of PO/LOI whichever is earlier**
1	**SS Flexible Hose pipe Set of Oil Gun Assembly** Type-I, 01 no. hose pipe with nipple on both sides, Length of Hose pipe with nipple-600 mm, Length of Hose pipe without nipple- 510 mm, Outside Dia. of nipple- 22 mm, Inside Dia. of nipple- 16 mm, MOC of Hose pipe including nipple- SS316	24 No.			
2	**LDO Gun** (XRZ-22R-330), Approx. Length: 2880 mm, Oil Gun Assembly Type-I with parallel pipe hose arrangement in one place along with atomizer of 10 holes	04 No.			
3	**Oil Burner Front Diffuser,** Material: Stainless Steel 304, Assembly: Oil Gun, Equipment: Oil Burner & Supply System, Make: Shanghai, Capacity:600 MW Additional Information: With Flexible Guide Hose Pipe For Corner 1 & 3	08 No.			
4	**Oil Burner Front Diffuser,** Material: Stainless Steel 304, Assembly: Oil Gun, Equipment: Oil Burner & Supply System, Make: Shanghai, Capacity:600 Mw Additional Information: With Flexible Guide Hose Pipe For Corner 2 & 4	08 No.			

Note:-

1. Refer drawings & other detail attached at Annexure 1 A to 1 E for reference & rate quoting purpose only.
2. Firms are advised to kindly visit RGTPP on any working day to view/check already installed material/equipment at site before quoting to avoid any fitment issue at later stage**. Firm may contact Mr. Ravi Ranjan AE/BMD-I (M-8222023754) on any technical issue**
3. All Participating firms has to comment upon and accept all our standard terms and conditions of NIT. In case of non-comment of any terms and conditions, it will be assumed that these term and conditions are acceptable to the tenderer. Firm has to quote the rates after considering all the factors/ clause of NIT.
4. In case of deviation from the standard terms and conditions of NIT, offer of the firm shall be liable to rejected.
5. The bidder must upload all annexure dully signed & stamped along with NIT documents.
6. **Please ensure eligibility as per ANNEXURE-'3' to Schedule-'C' for any concession strictly applicable to Haryana based MSME firm (manufacturing only).**
7. **Firms failing to deposit Tender Fee or EMD shall be outrightly rejected.**

Signature & Stamp of Bidder

Oil Burner Diffuser

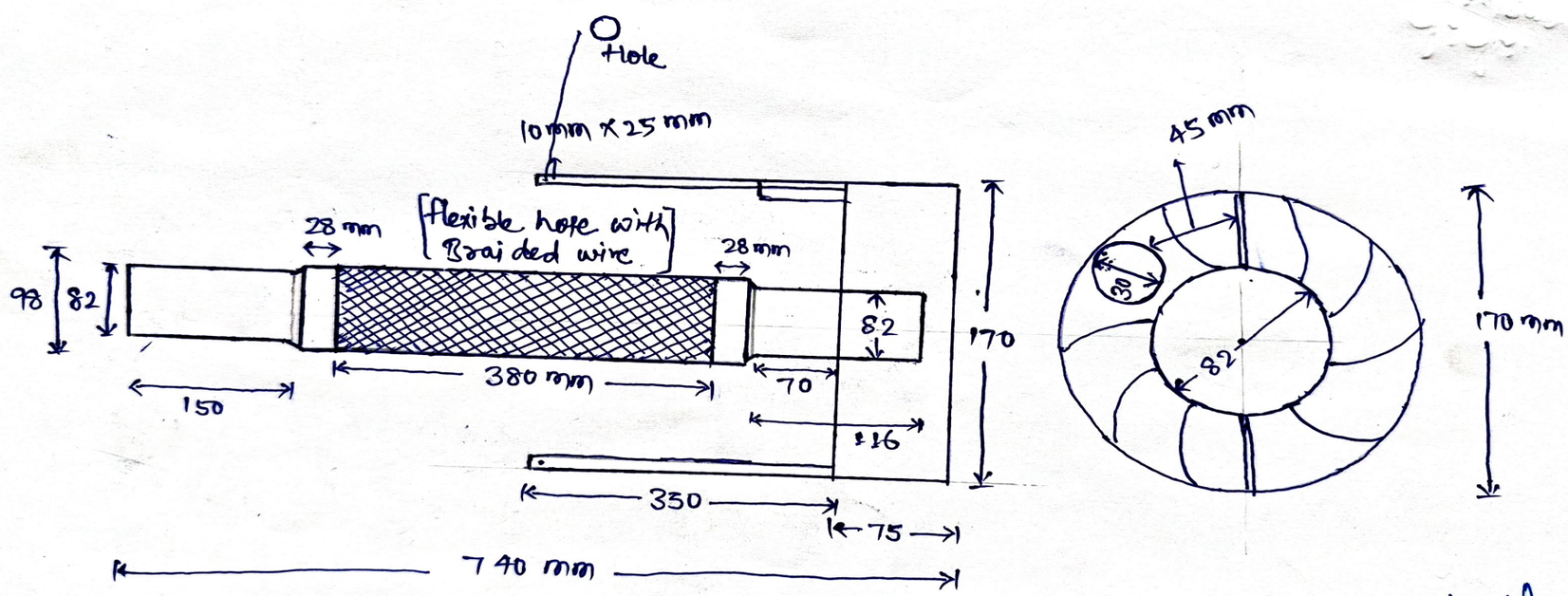

Rough sketch for cost estimation purpose. However, firm should visit RLTPP for taking actual measurement or collection of sample to avoid any fitment issue.

AE/BMD-1

Annexure-1B

C

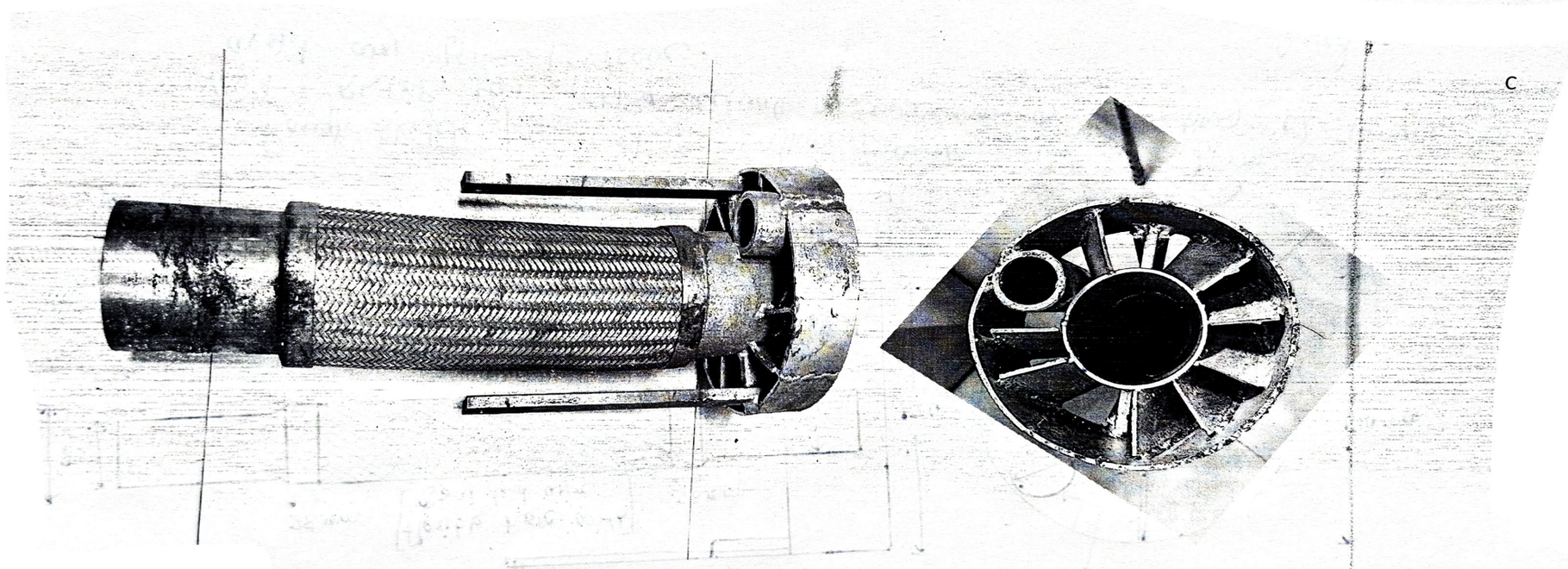

Photographs

AE/BMA

Annexure-1C

TECHNICAL SPECIFICATIONS FOR OIL GUN FLEXIBLE HOSES

1. 01 No. Hose pipe means one hose pipe with nipples on both sides.
2. Length of Hose pipe including nipple = 590 mm
3. Length of Hose pipe excluding nipple = 503 mm
4. Outside diameter of Nipple = 22 mm
5. Inside diameter of Nipple = 22 mm
6. Outside diameter of flexible portion of hose pipe = 23 mm
7. MOC of Hose pipe including Nipple = SS304
8. **QAP:** This item shall be pressurized up to a pressure of 50 kgf/cm^2 and the firm to whom Purchase Order shall be awarded should arrange this test at its own workshop or a lab of government agency. For this if need be the firm must mandatorily plug one side of these hose pipes.
9. Firm should also arrange MOC inspection for this item by the use of PMI machine at its workshop or any lab of Government agency.

A.E./BMD-II
RGTPP, HPGCL
Khedar, Hisar

Xen/BMD-II
RGTPP

ALL DIMENSIONS ARE IN MM
UNLESS SPECIFIED TOLERANCE
SHALL BE ± 0.3mm

NOTES:

1. THE OVERALL LENGTH & SIZE SHALL MATCH EXISTING OIL GUN.
2. OIL / STEAM CONNECTION TO MATCH EXISTING ARRANGEMENT.

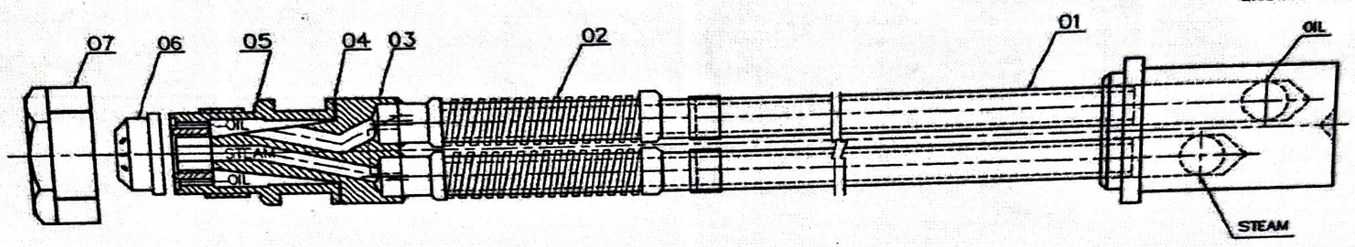

STY. No.	ITEM No.	DESCRIPTION	DRAWING No	MATERIAL	UNIT WT (KG)	QTY
	07	CAP NUT		SS		1
	06	ATOMISER		HIGH CS		1
	05	REMOVABLE NOZZLE BODY		CS		1
	04	GASKET		NON ASBESTOS		1
	03	NOZZLE SLEEVE		CS		1
	02	SS FLEXIBLE HOSE		SS		2
	01	PARALLEL PIPE OIL GUN		CS		1

CUSTOMER/PROJECT: M/S HPGCL, RGTPP 2x660 MW

REVISION	DATE	ALT.	
		ORD.	

CONTRACT NO:

	NAME	SIGN.	DATE
DRN	P.M		28.04.11
CHD	S.R		28.04.11
APPD	C.C.S.		28.04.11

SCALE: | WEIGHT (kg):

TITLE: OIL GUN ASSY – TYPE 1 (PARALLEL PIPE)

DRG No: 3-SPG-4954

REV. 00

A.E./BMD-II
RGTPP, HPGCL
Hisar

Xen/BMD-II
RGTPP

Annexure-1E

ALL DIMENSIONS ARE IN MM
UNLESS SPECIFIED TOLERANCE
SHALL BE ± 0.3mm

NOTES:

1. THE OVERALL LENGTH & SIZE SHALL MATCH EXISTING OIL GUN.
2. OIL / STEAM CONNECTION TO MATCH EXISTING ARRANGEMENT.

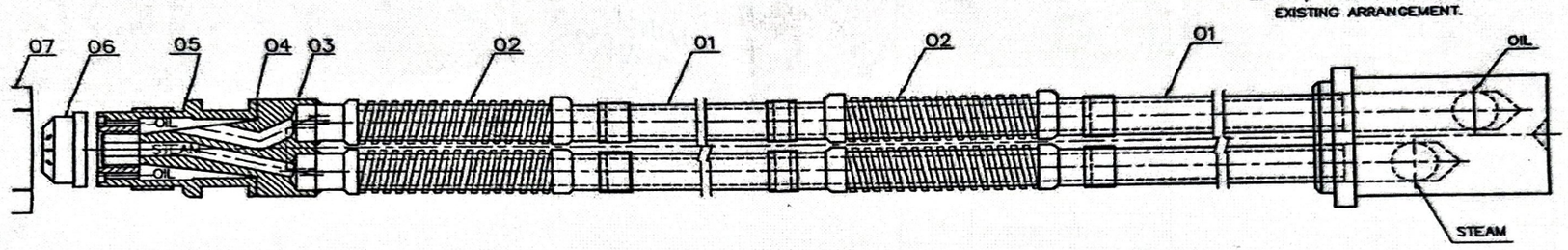

STY. No.	ITEM No.	DESCRIPTION	DRAWING No	MATERIAL	UNIT WT (KG)	QTY
	07	CAP NUT		SS		1
	06	ATOMISER		HIGH CS		1
	05	REMOVABLE NOZZLE BODY		CS		1
	04	GASKET		NON ASBESTOS		1
	03	NOZZLE SLEEVE		CS		1
	02	SS FLEXIBLE HOSE		SS		4
	01	PARALLEL PIPE OIL GUN		CS		1

CUSTOMER/PROJECT: M/S HPGCL, RGTPP 2x660 MW

CONTRACT NO:

	NAME	SIGN.	DATE
DRN	P.M		28.04.11
CHD	S.R		28.04.11
APPD	C.G.S.		28.04.11

SCALE | WEIGHT (kg)

TITLE: OIL GUN ASSY – TYPE 2 (PARALLEL PIPE)

DRG No: 3–SPG–4955 REV. 00

A.E./BMD-II
RGTPP, HPGCL
Khedar, Hisar

Xen/BMD-II
RGTPP

ANNEXURE-'II'

(The bidder must upload this Annexure-II dully signed & stamped along with NIT documents)

STATEMENTS OF BIDDERS

1. **Name of Bidder** _____
2. **Address of Head Office** _____
3. **Correspondence Address** _____

   _____

   Mobile No:-

   E mail Id:-

4. **Legal status**
5. **PAN & TIN Number of the Bidder (attached self attested photocopies)**

   PAN _____ **TIN** _____

   GST No.: _____.

   Contact No:-

6. **Bank Details (attached signed cancelled cheque)**
   - i) **Bank Name & Address**
   - ii) **Bank Account Number**
   - iii) **Bank Branch Code**
   - iv) **IFSC Code of Branch**
   - v) **Nature of account (current/saving/OD/CC)**
7. **Main lines of Business**
   - i. _____ **since**_____
   - ii. _____ **since**_____
   - iii. _____ **since**_____
8. **Annual Turnover of past three year**
   - i. _____
   - ii. _____
   - iii. _____
9. **Past Experience:-**

Name of Organization	Period	Reference of Contract	Order Value contract wise

10. **Any other Detail:-**

Signature & Stamp of Bidder

STANDARD OPERATING PROCEDURES TO BE FOLLOWED TO MONITOR GST COMPLIANCE :

Stage I : Floating of Notice Inviting Tender (NIT) - (to be followed by executive wing)

- It is to ensure that the all prospective bidders to submit copy of Registration Certificate under GST Act.
- The following undertakings (on the letter head of bidder) to be made part of mandatory documents to be submitted by all bidders:

  GST registration is valid as on date

  No default has ever been made by bidder in filing the various GST returns and deposit of GST dues with the department.

  Bidders having multiple registrations under GST will submit undertaking for each & every GST number. A default under a GST number even if the GST number pertains to some other state, will make the vendor ineligible to participate in tender.

  In addition, the successful bidder will also submit the following undertakings in addition to above immediately after issue of work order and with submission of each & every bill unless mentioned otherwise:

  Undertakings mentioned at 1.1, 1.2 and 1.3

  A CA certificate regarding validity of GST registration will be submitted every six months during the tenure of contract.

  Vendor will submit copies of GSTR I and GSTR 3B/challans as evidence to deposit of GST with certification that GST collected from HPGCL, to be specified in exact rupees, has been paid to Govt. vide this challan (specifying the challan no. & date of deposit) and returns filed (date of filing of return) includes the transaction of supply of Good or/and services to HPGCL.

  Vendor will inform immediately the HPGCL about initiation of any proceeding (if any) against him under the GST laws which may result in suspension or cancellation of GST number of the Vendor.

  Undertaking to indemnify the HPGCL in case of any financial implication on HPGCL due to non-compliance of prescribed obligation under the GST Law on part of the Supplier/vendor.

  In case of ARCs/AMCs having duration above one year, copies of GSTR 1, GSTR 2A and GSTR 3B along with copies of invoices raised to HPGCL, duly reconciled with three returns to be submitted on quarterly basis.

  In case of one time job orders and purchase orders, copies of GSTR 1, GSTR 2A and GSTR 3B along with copies of invoices raised to HPGCL, duly reconciled with three returns to be submitted before release of the security.

Stage II : Scrutiny of bids - (to be followed by Bid screening Committee)

- The GST registration status of vendors will be verified from the official website **www.gst.gov.in**
- The address of vendor, the place from which supplies will be made or the invoice will be raised, mentioned in bid document should match with the GST registration number on the department's website. In case vendor is having multiple GST registration numbers, executive to ensure that GST number linked to place of supplier should be submitted to HPGCL.
- Filing status of following returns is to be verified that the returns are being filed by vendor within due dates:

Return	**Periodicity of filing**	**Return for**
GSTR1	Monthly	Outward supplies
GSTR2A	Monthly	Its auto populated on GST portal on the basis of GSTR 1 filed by vendor.
GSTR 3B	Monthly	Payment of GST
GSTR9	Yearly	Compilation of outward and inward supplies, made during the FY
GSTR9C	Yearly	Analytical statement on GST returns certified by GST Auditor

- Verify that the undertakings, as specified in NIT, have been submitted by bidders. Failure to submit unconditional undertakings will render the bidder to ineligible at technical stage of evaluation itself.

Stage III : Award of contract/ Issue of PO & WO- (to be followed by executive wing)

- Purchase order/work order to specify that in case of failure at the end of vendor regarding deposit of tax and in complying with conditions mentioned at stage I & II, HPGCL will have right to recover the GST amount in default

along with interest & penal amount and deposit the same directly with GST department on behalf of vendor to the credit of HPGCL.

- Vendor will undertake to immediately inform the HPGCL about any amendment in the GST certificate and to immediately submit the updated registration certificate.

Stage IV : Receipt of first invoice- (to be followed by Executive and Accounts wing)

- Executive wing to verify that the invoice is in performa as specified under GST laws (Section 31 to 34 of CGST Act read with Rules 46 to 55A of the CGST rules deal with the Tax invoice, Credit notes and debit notes) with correct GST number of HPGCL so that no difficulty is faced by HPGCL while claiming Input Tax Credit of GST due to incorrect GST number and also to reconcile the GST number and address of supplier as per invoice with the GST number & address given in tender documents submitted by vendor and submit the duly verified invoice to accounts wing.
- After the implementation of the E-Invoice w.e.f. 01 Oct 2020 generation of e- invoice from common e-invoice portal for B2B supplies by person having aggregate annual turnover of more than Rs. 500 Crs has been made compulsory. And w.e.f 01.Jan 2021 Generation of E-invoice for GST supplies by person having aggregate turnover of more than Rs. 100 Crs has been made compulsory. And w.e.f 01.04.2021 generation of E-invoice for GST supplies by the person having aggregate turnover of more than Rs. 5 Crs is proposed to made compulsory. The nodal officer/engineer in charge of the contract/appointed officer of the respective plant should demand from the supplier E-Invoice containing the invoice reference number (IRN) and QR code. It is worthwhile to note that any tax invoice including tax credit / Debit note issued by such notified person for B2B supplies without following the e- invoicing procedure shall not be treated as a valid document.
- Obtain a undertaking from the vendor who are not generating e-invoice in following format:
  We M/s. ……. having PAN …… and GSTIN Registration Number …….hereby undertake that our Aggregate Turnover (as per Section 2(6) of Central Goods and Services Tax Act, 2017) for FY 2025-26 does not exceed the prescribed threshold (as on the date of this declaration) for generation a Unique Invoice Registration Number (IRN) and QR code as per the provisions of Central Goods and Services Tax Act, 2017 and rules thereunder ("GST Law"). Further, we also undertake that if the aggregate turnover of M/s. ……. exceeds the current

  threshold or revised threshold notified by Government of India at any future date, then we shall issue invoice and credit note in compliance with the required provisions of GST Law. In case of any queries from the any state or centre Goods and Services Tax authorities, M/s. ……will be solely responsible.

  Yours Truly,

  For M/s…….

  Authorized Signatory Name: Designation:

- Accounts wing to check Arithmetical accuracy, Rate of GST charged & other calculations.
- In case there is difference in value of invoice, due to difference in quantity or quality actually supplied, GST will be applied on revised value of invoice

Stage V : Receipt of IInd & subsequent invoices – (to be followed by Executive and Accounts wing)

- In addition to procedure mentioned in stage IV, following steps to be undertaken
- All undertaking mentioned at stage I to be obtained & verified.
- GSTR 2A should be matched with amount of GST paid. In case, the details are not there in GSTR2A, issue needs to be taken up with vendor and GST consultant of HPGCL.

Others: (to be followed by Executive and Accounts wing)

- EMD and Securities/Bank guarantees taken by HPGCL may be refunded only after payment of GST by vendor/contractor which was charged from HPGCL.
- In case any issue arises wrt failure by the firm in GST compliances, all future payments to be put on hold after having consultation with HPGCL's GST consultant.

Annexure-1

Undertaking from the vendor (on vendor's letter head for not generating e-invoice

We M/s. …….. having PAN …… and GSTIN Registration Number …….hereby undertake that our Aggregate Turnover (as per Section 2(6) of Central Goods and Services Tax Act, 2017) for FY 2025-26 does not exceed the prescribed threshold (as on the date of this declaration) for generation a Unique Invoice Registration Number (IRN) and QR code as per the provisions of Central Goods and Services Tax Act, 2017 and rules thereunder ("GST Law"). Further, we also undertake that if the aggregate turnover of M/s. ……. exceeds the current threshold or revised threshold notified by Government of India at any future date, then we shall issue invoice and credit note in compliance with the required provisions of GST Law. In case of any queries from the any state or centre Goods and Services Tax authorities, M/s. ……will be solely responsible.

Yours Truly,
For M/s……..

Authorized Signatory Name: Designation:

Annexure-2

Undertaking from the vendor (on vendor's letter head) regarding validation of GST registration (for each GST number separately)

1.1.1. GST registration of GST no……. in name of m/s…….....……..is valid as on date……..

1.1.2. No default has ever been made by me/my firm in name of …… in filing the various GST returns and deposit of GST dues with the department with respect to GSTN…….

Yours Truly,
For M/s……

Authorized Signatory Name: Designation:

Annexure-3

Undertaking cum declaration from the vendor (on vendor's letter head)

1.2. I undertake to submit a CA certificate regarding validity of GST registration on every six months during the tenure of contract.

1.3. I undertake to submit copies of GSTR I and GSTR 3B/challans as evidence to deposit of GST with certification that GST collected from HPGCL, to be specified in exact rupees, has been paid to Govt. vide this challan (specifying the challan no. & date of deposit) and returns filed (date of filing of return) includes the transaction of supply of Good or/and services to HPGCL.

1.4. I undertake to inform immediately the HPGCL about initiation of any proceeding (if any) against me/my firm under the GST laws which may result in suspension or cancellation of GST number of the Vendor.

Yours Truly,
For M/s……..
Authorized Signatory Name: Designation:

Annexure-4

Undertaking cum indemnity bond from the vendor (on vendor's letter head) regarding timely deposition of GST

a) Certified that we are registered as taxable person under GST Act, our GST no. is ---------- and which is active as on----------.

b) Certified that bill for the month of----------in which GST has been claimed, is included in all the GST returns submitted by us to the GST authorities.

c) Certified that we shall deposit the amount of GST collected from RGTPP/HPGCL to the Government exchequer within the time specified under the GST Law.

d) Certified that the goods/services on which GST has been charged have not been exempted from GST under GST Act. The rate/amount of GST in these goods/services is correct under the provisions of the GST Act.

e) We give Undertaking-cum-indemnity bond to RGTPP/HPGCL that we shall indemnify to RGTPP/HPGCL for any loss sustained in case we does not deposit the GST to the government exchequer, which it has recovered from the M/s HPGCL as tax.

Yours Truly,
For M/s……..
Authorized Signatory Name: Designation:

ANNEXURE-'3' to Schedule-'C'

Special Benefits / Concessions to the Haryana based Micro, Small and Medium Industrial Enterprises in the State Public Procurement as under(G.O. No.- 2/2/2016-41B11 (1) dated 20.10.2016) :-

A. Concessions / Benefits to Micro and Small Enterprises (MSEs):-

Sr. No.	Area as part of qualifying requirements	Concessions / benefits allowed to MSEs	Eligibility
1	Tender Fee	Exemption on the payment of tender fee subjected to fulfillment of conditions as per eligibility	Manufacturing Micro & Small Enterprises(MSEs) (Including Khadi & village Industries/Units) who have filed Entrepreneur Memorandum in Haryana in respect of the quoted items, participate directly in tender and not through any intermediaries (their dealers/agent/distributors), will not subcontract to any other firm and to carry the entire manufacturing at their enterprise. Concerned MSE will be required to submit the copy of Entrepreneurs Memorandum in respect of its category of Micro/small issued to the firm by the Industries Department Haryana as part of Technical Bid. Manufacturing Micro & Small Enterprises(MSEs) (Including Khadi & village Industries/Units) who have filled Entrepreneur Memorandum in Haryana and further:- a) Those MSEs have Quality Certification of ISI/ ISO / AgMark/ Quality Mark issued from competent authority in State or Central Govt. in respect of the items/ goods mentioned in the tender. OR/AND b) Those who were registered with DGS&D/NSI / GOI Department/ State Govt. Department / GOI PSUs/ State Govt. PSUs in respect of the item/ goods mentioned in the tender. The firm will be required to submit the detailed information in respect of above through an affidavit as per the format enclosed as Annexure-D-I
2	Earnest Money Deposit (EMD)	Exemption on the payment of Earnest Money Deposit (EMD) subjected to fulfillment of conditions as per eligibility	
3	Performance Security	90% concession on performance security as applicable to other Haryana based firm's subject to fulfillment of condition as per eligibility.	
4	Turnover	a) Micro Enterprises: Concession of 80% on turnover condition imposed as qualifying criteria. b) Small Enterprises: Concession of 70% on turnover condition imposed as qualifying criteria	
5	Past performance & Experience	Exempted in respect of Past Performance & Experience as part of requirements of the tender subject to fulfillment of conditions as per eligibility.	
6	Purchase Preference	50% of the total tendered quantity providing quoting price within band of L-I+15% by bringing down their price to L-I and subject to condition that it agrees to fulfillment of other terms & conditions of the tender and further subject to fulfillment to conditions as per eligibility.	

B. Concessions / benefits to Medium Enterprises:-

Sr. No.	Area as part of requirements	Concessions benefits allowed to MSEs	Eligibility
1	Past Performance & Experience	Exemption on requirements of Past Performance & Experience as part of qualifying requirements of the tender subject to fulfillment of conditions as per eligibility.	Manufacturing Medium Enterprises of the state have filled Entrepreneur Memorandum for quoted items in Haryana, participated directly in tender and not through any intermediaries (their details/agents distributors), and will not subcontract to any other firm and to carry the entire manufacturing at their enterprises. This concession will be applicable only for one year to newly registered Medium Enterprises or Medium Enterprises of state who are not eligible in State Public Procurement due to eligibility criteria of Past performance & experience. The firm will be required to submit the detailed information in respect to above through an affidavit as per the format enclosed at Annexure-D-II
2	Purchase Preference	10% of the total tendered quantity provided quoting price within band of L-I+15% by bringing down their price to L-I and subject to condition that it agrees to fulfillment of other terms & conditions of the tender and further subject to fulfillment of conditions as per eligibility.	

Annexure-'D-1'

(Seeking benefits / concessions in past performance / Experience & Purchase Preference by Haryana based manufacturing Micro & Small Enterprises (MSEs) in the state Public Procurement)

(On non Judicial paper of Rs. 10/-)

I _____ S/o _____ aged _____residing at _____Proprietor / Partner / Director of M/s _____ do hereby solemnly affirm and declare that:-

1. My / our above noted enterprise M/s _____ (name & Address) _____ has been issued manufacturing Entrepreneurs Memorandum in Haryana by the District Industries Center _____ under acknowledgement No. _____ of dated _____ (Self certified copy of the same is attached as **Annexure-A** with this affidavit) and has been issued for manufacture of the following items in **category Micro / Small Enterprise** (please thick the either) as under:-
   i) _____
   ii) _____
   iii) _____
2. That the quoted item(s) in the tender_____ is one (or more) of the item for which my/our above noted enterprise has been issued. Manufacturing Entrepreneurs Memorandum by the Industry Department Haryana as per details at para 1 above.
3. That my/our above mentioned manufacturing Micro/Small Enterprises fulfills either or both of the below mentioned eligibility criteria:-
   i. That my/our above mentioned enterprise has been issued quality certification of ISI Mark/ ISO/ Ag.Mark/ any other quality mark_____(please tick either of the option) by _____(name of GOI/ State Govt. Agency/ Institution authorized by GOI/ State Govt.) on _____ and the same is valid from_____ to _____ in respect of item/ good (give name of item/ good) _____mentioned in the tender (Self Certified Copy of the relevant certificate is attached as **Annexure A'** with this affidavit).
   ii. That my/our above mentioned enterprises has been registered with DGS&D, GOI/NSIC/ Govt. of India Departments /State Govt. Department/ Govt. of India Public Sector Undertaking (PSUs) or State Government Public Sector Undertakings (PSUs) (Please tick one of the option as above) in respect of Name of item/ goods/work/services _____ (Name) as mentioned in the tender for the corresponding period of time of this tender. A self Certified Copy of the same attached as Annexure 'B' with this affidavit.
4. That in case the purchase order of the quoted item is issued to me/us, it will not be outsourced or subcontracted to any other firm and the entire manufacturing of the order item shall be done In-house by our Enterprises based in Haryana (address mentioned as at Sr. No.1) Further, the billing will be done from Haryana.

Dated: DEPONENT

VERIFICATION:

Verified that the contents of para no. 1 to 4 of the above are true and correct to my knowledge as per the official record and nothing has been concealed therein.

Dated: DEPONENT

Annexure-'D-2'

(For seeking the benefits / concessions by Haryana based manufacturing Medium Enterprises in Past Performance / Experience & Purchase Preference in the state Public Procurement)

(On non Judicial paper of Rs. 10/-)

I _____ S/o _____ aged _____residing at _____Proprietor / Partner / Director of M/s _____ do hereby solemnly affirm and declare that:-

1. M/s / our above noted enterprise M/s _____ (name & Complete Address) _____ has been issued manufacturing Entrepreneurs Memorandum in Haryana by the District Industries Center _____ under acknowledgement No. _____ of dated _____ (Self certified copy of the same is attached as **Annexure-A** with this affidavit) and has been issued for manufacture of the following items in **category Medium Enterprise** as under:-
   i) _____
   ii) _____
   iii) _____
   iv) _____
2. That my/our above mentioned manufacturing Medium Enterprises meat all the remaining terms & conditions of the tender except Past Performance / Past Experience.
3. That my first Purchase order under this benefit / concession was issued by State Government Department / State Government Agency (name of Deptt. / Agency) _____ vide P.O. No. _____ of dated _____ for the supply of _____ (name of the item/good/works/services) was successfully complied by above mentioned Enterprises. A self certified copy of the same is attached as **Annexure-B** with this affidavit.
4. That in case the Purchase Order of the quoted item is issued to me/us, it will not be outsourced or subcontracted to any other firm and the entire manufacturing of the order item shall be done in-house by our enterprise based in Haryana, (address mentioned as at Sr. No.1).
5. That we agree to the condition that this benefit / concession to the Medium Enterprise is valid for one year from the date of getting the first supply order under state Public Procurement.
6. That the billing will be done from Haryana.

Dated: DEPONENT

VERIFICATION:

Verified that the contents of para no. 1 to 6 of the above are true and correct to my knowledge as per the official record and nothing has been concealed there in.

Dated: DEPONENT

The general guidelines for the apportionment of tendered quantity to the firms other than MSMEs, MSEs and MEs will be as under:-

i. Purchase Preference to MSMEs will not be applicable if the tendered quantity is only one.
ii. Purchase preference for Medium Enterprises (MEs) will only be allowed on the quantities in multiple of 10 say 10, 20, 30 and so on. The quantity less than 10 or in between multiple of 10, 20, 30 will not be considered for Purchase Preference to MEs.
iii. Negotiations will be held only with L1+5% firms. MSMEs as per above instructions within the price range of L1+15% will be counter offered to match the finally arrived L1 rate. In case MSMEs within L1+15% range refuse to match the finally arrived L1 rate then the entire 60% (50% for MSEs and 10% for MEs) of Purchase Preference will be transferred to L1+5% category firms.
iv. In case, no micro & Small Enterprises (MSEs) and Medium Enterprises (MEs) as per eligibility criteria specified in the above instructions are within L1+15% range, the entire 100% tendered quantity will be distributed as per the existing guidelines.
v. In case there are no Micro & Small Enterprises (MSEs) within L1+15% range, the Purchase Preference Quota of 50% of MSEs will stand transferred to open category making it from 40% to 90%
vi. In case there are no Medium Enterprises (MEs) within L1+15% range, the Purchase Preference Quota of 10% of MEs will stand transferred to open category making it from 40% to 50%
vii. In case no MSMEs, within L1+5% range and there is one MSE & one ME in L1+15% range and further agree to match the arrived L-1 rate. The quantity will be distribution will be upto 40% for firm other then MSME, upto 50% for MSE and upto 10% for ME and so on.
viii. In case there are MSMEs (both or either MSEs) within L1-5% range and there are MSEs & MEs in L1+15% range. Negotiations will be carried out with all firms within L1+5% as per existing guidelines to arrive at finally arrived L1 rate. The finally arrived firm can be any other such a situation, apportionment will be done as per the existing instructions of ratio of 70:30 or 50:25:25 & so on. Thereafter, offer will be given to MSE and MEs within L-15% range to match the finally arrived L1 rate and if they agree to match the arrived L-1 rate, the apportionment of quantity will have many scenarios of quantity apportionment may be as per annexure-III enclosed with this notification. However, there can be many more scenarios depending upon the number of MSMEs within price range of L1+5% and L1+15%.

The above instructions will supersede the instructions as issued vide industries & Commerce Department Haryana Order No. 2/2/2010-41-IB-II of dated 24.03.2015 related to concessions / benefits to Haryana based Micro & Small Enterprises (MSEs) including Khadi & Village Industrial Units.